grupo mess — all about metrology	Plan Name EHQ-5672-GAGE	DATE 2025-04-16
	OT LD25-07E-300	Time 4:38:04 pm
Part Name Flush Pin Gage	Drawing No. EHQ-5672-GAGE	Customer Danfoss Power Solutions
Metrologist Jose Manuel Mendoza	Length unit mm / in	No. de pieza 1

Name	ID	Actual	Nominal	pos Tol	neg Tol	Diff	<--|-->

Mediciones en mm

Item 1 Distancia	PerpLe	0.6355	0.6096	0.0000	-0.0127	0.0259	0.0259
Item 2 Distancia	ResEle	52.8547	53.1876	0.0127	0.0000	-0.3329	-0.3329

Mediciones en in
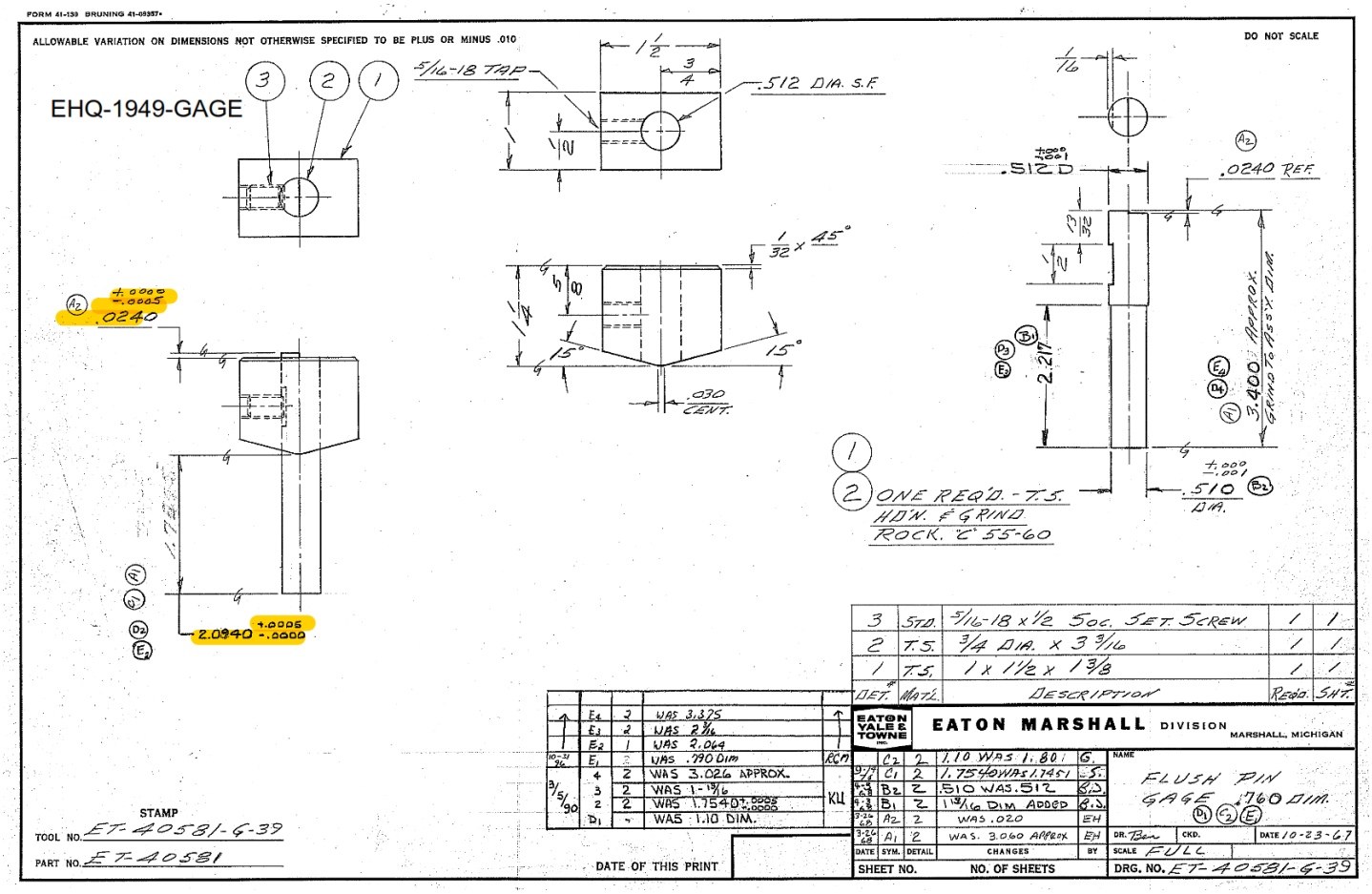
Item-1 Distancia	ResEle	0.0250	0.0240	0.0000	-0.0005	0.0010	0.0010
Item-2 Distancia	ResEle	2.0809	2.0940	0.0005	0.0000	-0.0131	-0.0131