Routine Name	Run #	Date & Time
Q0000-0287 B #5.1.mxi	1	2025-04-03 6:40:53 PM

Feature	Unit	Nominal	Actual	Tolerances		Deviation	Exceeded
Step 3 - Item_01 Distancia							
■ Width	mm	+10.4000	+10.3636	+0.0000	-0.1000	-0.0364	--
Step 8 - Item_02 Distancia							
■ Width	mm	+1.6500	+1.6578	+0.0200	-0.0200	+0.0078	++
Step 6 - Item_03 Diametro							
■ Diameter	mm	+0.8000	+0.8340	+0.0500	-0.0500	+0.0340	+++
Step 4 - Item_04 Radio							
■ Radius	mm	+0.5000	+0.5305	+0.1000	+0.0000	+0.0305	++
Step 5 - Item_05 Radio							
■ Radius	mm	+0.5000	+0.5236	+0.1000	+0.0000	+0.0236	+

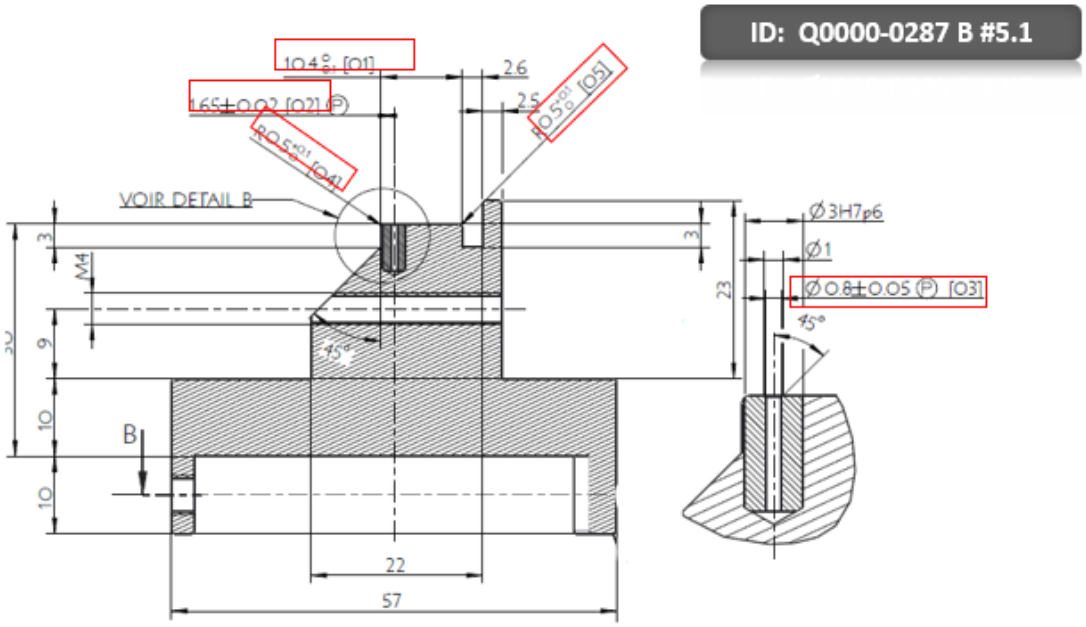

Prox. cal 2026

5 COTAS

FIN DE DOCUMENTO.